AKH-0.66/I current transformer

1.Product feature

They are patented and flip designed. The appearance is nice and the wiring is convenient. The transparent polycarbonate material is selected for the flip.We can clearly see the secondary lead wiring. It have square-round hole for both cable and bus passing through . As alternating current signal acquisition element,it is generally matched with measuring instruments and widely used in electrical sets.

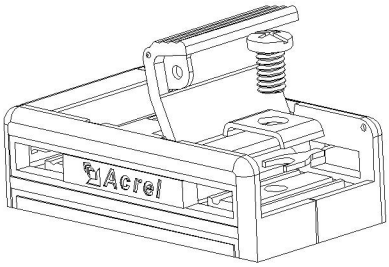

2. Explanation for type

AKH - 0.66 □ - I □

- Rated current ratio
- Auxiliary Specifications
- Specifications
- Rated voltage,kV
- Code of product series

3. Spec. and size

Size (mm) / Type	Outline size			Through size			Mounting size		Tolerance (mm)
	W	H	D	a	e	Φ	M	N	
30 I	60	78	36	31	11	22	34	57.5	±1
40 I	75	95	45	40	11	31	40	57.5	
60 I	102	130	45	61.5	21	45	42	57.5	
80 I	118	140	45	82	11	52	60	57.5	

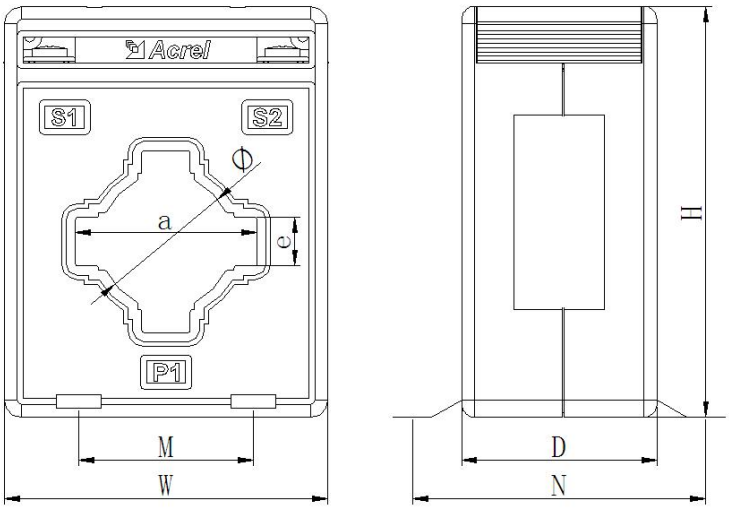

4. Cross-reference tables of spec. –parameter

Specification	Rated current ratio (A)	Precision degree and corresponding rated load (VA)			Straight-through tums	Bus spec(mm) /number	Max. cable outer diameter (mm)	Install ation
		0. 2	0. 5	1				
30I	15/5 (1)			1. 5	5	/	Φ22	A
	20/5 (1)			1. 5	4			
	25-30/5 (1)			1. 5	3			
	40-60/5 (1)			1. 5	2			
	75-100/5 (1)			1. 5	1	30×10/1		A、B
	150-200/5 (1)		2. 5		1			
	250/5 (1)		3. 75		1			
	300-450/5 (1)		5		1			
	500/5 (1)		10		1			
	600/5		10		1			
40I	10/5 (1)			1. 5	10	/	Φ30	A
	15/5 (1)			1. 5	8			
	20/5 (1)			1. 5	5			
	25-30/5 (1)			1. 5	4			
	40/5 (1)			1. 5	3			
	50-75/5 (1)			1. 5	2			
	100/5 (1)			1. 5	1	40×10/1		A、C
	150/5 (1)			2. 5	1			
	200/5 (1)		2. 5		1			
	250/5 (1)		3. 75		1			
	300-450/5 (1)		5		1			
	500-800/5 (1)		10		1			
	1000/5 (1)	10			1			
60I	150/5 (1)			2. 5	1	60×10/1	Φ44	A、C



	200-250/5(1)		2.5		1	60× 6/1-2		
	300-450/5(1)		5		1			
	500-800/5(1)		10		1			
	1000-1250/ 5(1)	10			1			
	1500-2000/ 5(1)	20			1			
	2500/5(1)	30			1			



80I	150/5(1)			2.5	1	80×10/1	Φ50	A、C
	200-250/5(1)		2.5		1			
	300-400/5(1)		5		1			
	500-800/5(1)		10		1			
	1000-1250/ 5(1)	10			1			
	1500-2000/ 5(1)	20			1			
	2500-3000/ 5(1)	30			1			

5. Technical indicators

- Rated operation voltage AC 0.66kV(Equivalent AC 0.63kV,GB156-2003)
- Rated frequency 50-60Hz
- Ambient air temperature -30℃-70℃
- Height above sea level≤3000m
- Power frequency withstand voltage 3000v/1min 50Hz
- Used in place without direct rain and snow,without severe pollution and acute shock

6. Installation

A：Fixed by straight piece



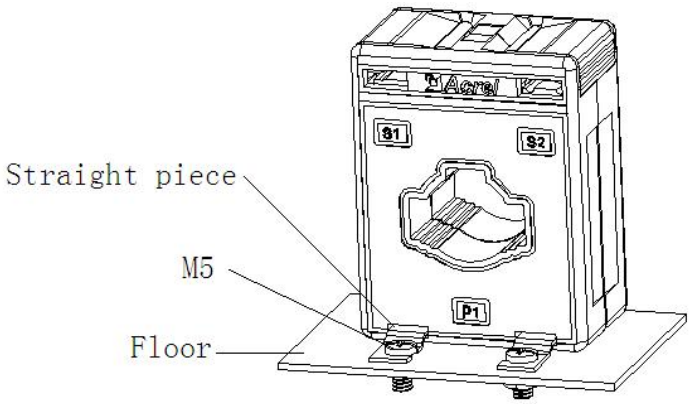

B：



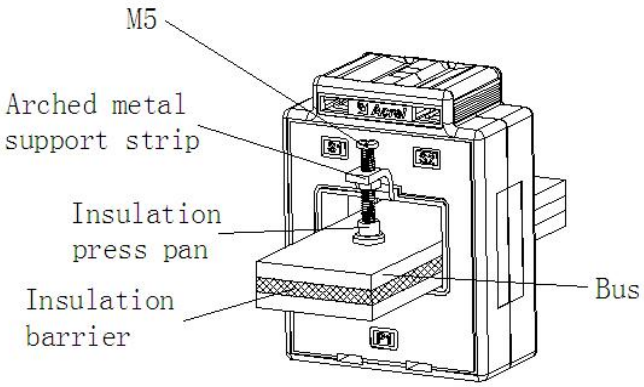

C：



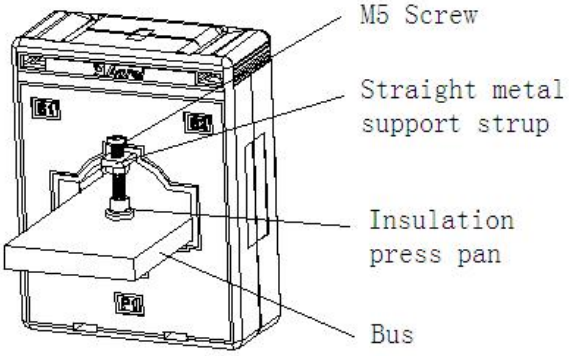

7. Design and test standards:

No.	Name	Testing condition	Measuring instrument	Product Verification Cycle	Product testing standards
1	Surface, Terminal mark	Temperature: 20-25℃ Humidity: 50-65%	HLS-50G2 Standard Current Transformer、HES-1 Digital Transformer Verification FY47 Current Transformer Load Cases FY49Current Transformer Load Cases LK2673 Withstand Voltage Tester ZC25-4 Insulation Resistance Shaking Instrument	2 Years	GB 20840.2-2014《Current Transformer》JJG313-2010 Verification Procedure
2	Power frequence Withstand voltage				
3	Insulation resistance				
4	Error testing				

Note: when the current transformer is used, the two time shall not open circuit, and the two outlet S2 needs to be grounded!